1 Channel Serial Interface RS 422

- ST-5221은 1 Channel RS 422 Serial Interface Module입니다.
- 통신속도는 300bps ~ 115.2Kbps를 지원하며, Full Duplex Type입니다.
- 이 Module에는 3개의 상태표시 LED가 있으며, 하나는 Module의 상태, 나머지는 통신 상태를 나타냅니다.
- FnBus와 통신 입,출력 신호선 사이에는 Photocoupler를 사용하여 전기적 절연이 되어 있습니다.

Items	Specification
Input Specification	
Transfer Channels	TxD, RxD, Full Duplex
Transfer Rate	300~115200bps
Data Bit	7bits, 8bits, 9bits
Parity Bit	None, Odd, Even
Stop Bit	1bit, 2bits
Bit Distortion	<1.6%
Connection	Spring force of RTB
Cable Length	1Km twisted pair
Isolation	Photocoupler Isolation, Isolation Voltage:1000Vrms/Vac
Data Buffer	In/Out User Data 5bytes, Control/Status 1byte
RxD Buffer	1024 bytes
TxD Buffer	256 bytes
Line Impedance	120Ω
Input Image Size	6 Bytes
Output Image Size	6 Bytes
General Specification	
Power Dissipation	155mA Max. @5.0Vdc
Operating Temperature	-20˚C ~ 55˚C
Storage Temperature	-40˚C ~ 85˚C
Relative Humidity	5% ~ 95%, No Condensation
Operating Altitude	2000m
Shock Operating	30G
Shock Non-Operating	50G
Vibration	2G@10~ 500Hz
Module Size	12mm x 99mm x 70mm
Environment Condition	Refer to " Environment Specification"(page : 1-261)

Pin No	Description
0	TxD+
1	TxD-
2	RxD+
3	RxD-
4	GND
5	GND
6	Shield
7	Shield

Wire diagram

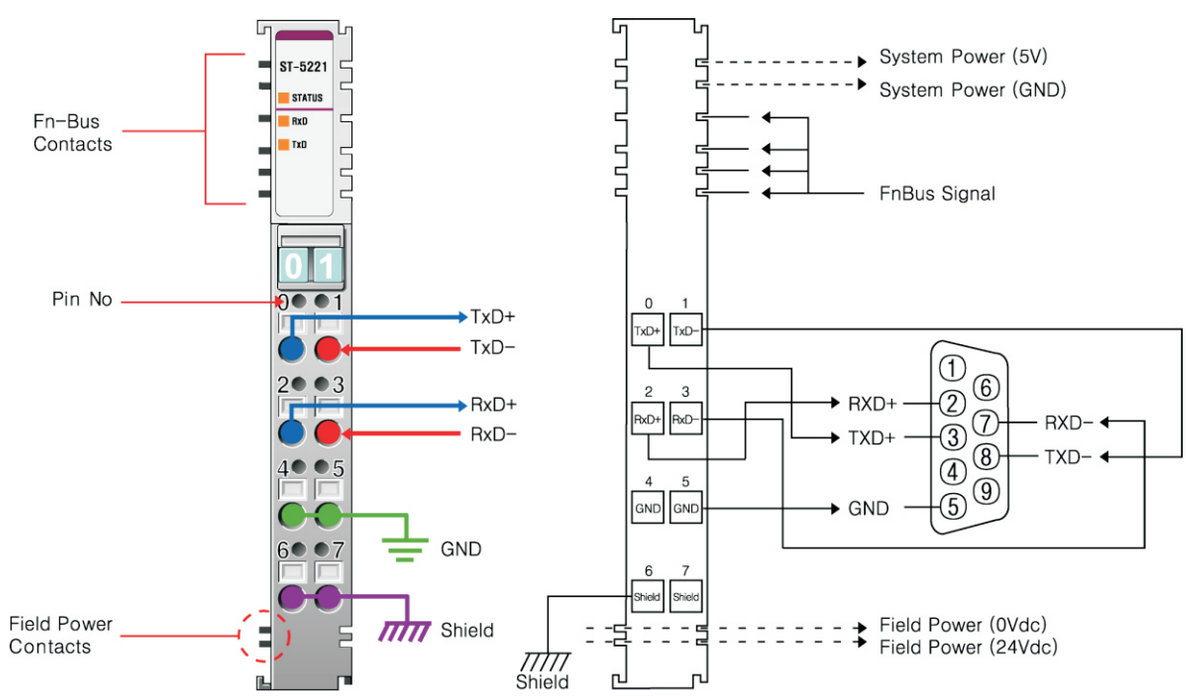

(주)크레비스 TEL:031-206-8077~8 http://www.crevis.co.kr e-mail : crevis@crevis.co.kr

I/O Process Image Table

Input Data

Byte Offset		Decimal Bits Bit 7	Bit 6	Bit 5	Bit 4	Bit 3	Bit 2	Bit 1	Bit 0
Byte #0	Status Byte	TPA	IL2	IL1	IL0	RBO	RR	TA	IA
Byte #1	Data Byte #0								
Byte #2	Data Byte #1								
Byte #3	Data Byte #2								
Byte #4	Data Byte #3								
Byte #5	Data Byte #4								

Output Data

Byte Offset		Decimal Bits Bit 7	Bit 6	Bit 5	Bit 4	Bit 3	Bit 2	Bit 1	Bit 0
Byte #0	Control Byte	TPR	OL2	OL1	OL0	-	RA	TR	IR
Byte #1	Data Byte #0								
Byte #2	Data Byte #1								
Byte #3	Data Byte #2								
Byte #4	Data Byte #3								
Byte #5	Data Byte #4								

Status Byte

- IA : Initialization Acknowledge
- TA : Transmit Acknowledge
- RR : Receive Request
- RBO : RxD Buffer Overrun Error
  There are two counters (Run counter and Index counter) which pointing at the position of RxD Buffer. Run counter is increased + 1 whenever RxD input, Index counter is increased as much as Input length that brought on Input data.
  Therefore, if (Run counter - Index counter) > 1024(RxD Buffer size), RxD Buffer Overrun error occurs.
- IL0 ~ IL2 : Input Length
- TPA : Transmit Processing Acknowledge (Related Configuration Parameter : TxD Buffering)

Control Byte

- IR : Initialization Request
- TR : Transmit Request
- RA : Receive Acknowledge
- OL0 ~ OL2 : Output Length
- TPR : Transmit Processing Request (Related Configuration Parameter : TxD Buffering)

Configuration Parameter Table

Offset	Decimal Bits							
Byte #0	Bit 7	Bit 6	Bit 5	Bit 4	Bit 3	Bit 2	Bit 1	Bit 0
	Parity Bit 00 : No Parity 01 : Odd Parity 10 : Even Parity Others : Unused * Default : 00		Data Bit 00 : 7 Data bit 01 : 8 Data bit 10 : 9 Data bit Others : Unused * Default : 01		Baud Rate 0000 : 300bps 0001 : 1200bps 0010 : 2400bps 0011 : 4800bps 0100 : 9600bps(*Default Value) 0101 : 19200bps 0110 : 38400bps 0111 : 57600bps 1000 : 115200bps Others : Unused			
Byte #1	Bit 7	Bit 6	Bit 5	Bit 4	Bit 3	Bit 2	Bit 1	Bit 0
	Reserved				CTS/RTS Flow Control 00 : RTS/CTS Disable 01 : RTS Enable 10 : CTS Enable 11 : RTS/CTS Enable * Default : 0 * Note 1		TxD Process 0 : Disable 1 : Enable * Default : 0 * Note 1	Stop Bit 0 : 1bit 1 : 2bit * Default : 0
Byte #2	Bit 7	Bit 6	Bit 5	Bit 4	Bit 3	Bit 2	Bit 1	Bit 0
	Reserved							
Byte #3	Bit 7	Bit 6	Bit 5	Bit 4	Bit 3	Bit 2	Bit 1	Bit 0
	Reserved							

* Note 1
- Disable : Transmit immediately Output Data #0 ~ Output Data #4
- Enable : Store the value of Output Data continually at RxD Buffer of Serial Interface Module When TPA bit and TPR bit of Control Byte and Status Byte are different, transmit all Data that saved at TxD Buffer.

(주)크래비스 TEL:031-206-8077~8 http://www.crevis.co.kr e-mail : crevis@crevis.co.kr