4 Points Diagnostics Sink(Negative Logic) Output Terminal 24Vdc / 0.5A

- ST-2414는 4 Channels diagnostic sink type output이며, 0Vdc/0.5A를 출력합니다.
- 접속된 부하는 control system으로 부터 digital output을 통해 연결됩니다.
- 모든 출력은 전기적으로 누전방지가 되어 있습니다. (short-circuit-protected)
- 이 module에는 5개의 상태 LED가 있으며, 하나는 network 상태, 나머지는 field devices 상태를 위한 것입니다.
- Fnbus와 Field I/O사이에는 photocoupler를 사용하여 전기적 절연이 되어 있습니다.

Items	Specification
Output Specification	
Outputs Per Module	4 Points, Sink type(Negative Logic)
Indicators	4 Green/Red Output States, 1 Green / Red FnBUS State
Output Voltage Range	24Vdc nominal, Min. 11Vdc to Max. 28.8Vdc
ON-state Voltage Drop	Max. 0.3Vdc@25℃
ON-State Min. Current	1mA Per Channel
OFF-State Leakage Current	Max. 50uA
Output Signal Delay	OFF to ON : Max. 0.3ms / ON to OFF : Max. 0.3ms
Output Current Rating	Max. 0.5A Per Channel / Max. 2.0A All Common
Output Protection (VNS3NV04D-E)	Over Temperature shut down : Min. 150℃ Over Current Limit : Min. 3.5A/Max. 7A Per Channel Short Circuit Protection ESD Protection : 16.5Kv
Common Type	4 Points / 4COM (Single Common)
General Specification	
Power Dissipation	Max. 45mA @ 5.0Vdc
Isolation	I/O to Logic : Photocoupler isolation Field Power : Non-isolation
Field Power	Supply Voltage : 24Vdc nominal Voltage Range : 11~28.8Vdc Power Dissipation : 5mA@28.8Vdc Per Channel
Wiring	I/O Cable Max. 2.0㎟(AWG 14)
Weight	70g
Module Size	12mm x 99mm x 70mm
Environment Condition	Refer to " Environment Specification"(page : 1-261)

Pin No	Description
0	Output Channel 0
1	Output Channel 1
2	Output Channel 2
3	Output Channel 3
4	Field Power (+24Vdc)
5	Field Power (+24Vdc)
6	Field Power (+24Vdc)
7	Field Power (+24Vdc)

Wire diagram

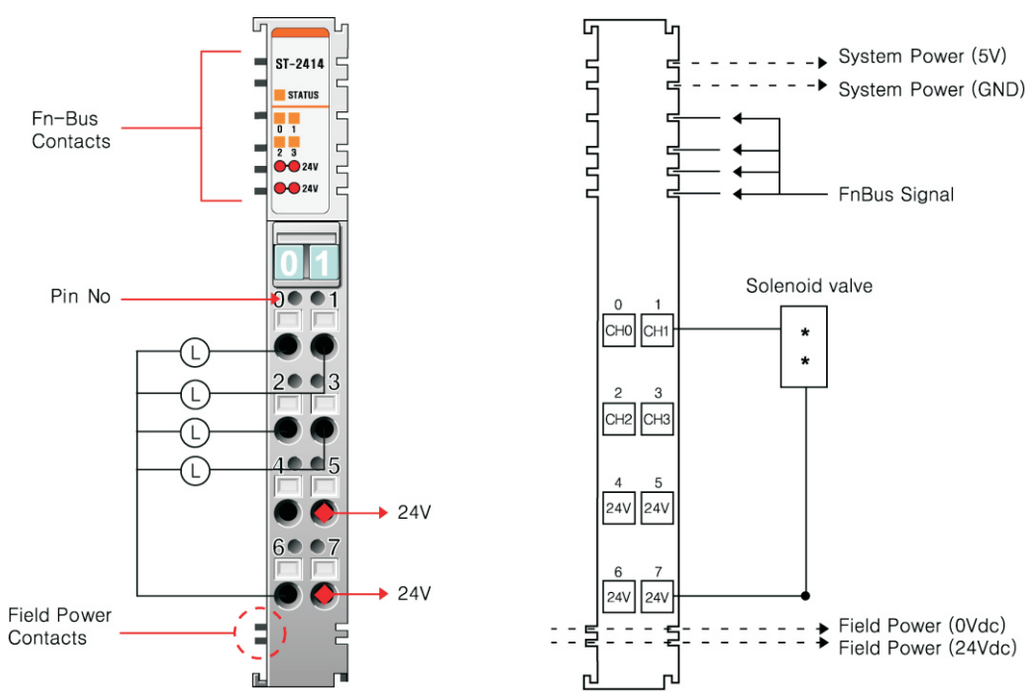

(주)크레비스 TEL:031-206-8077~8 http://www.crevis.co.kr e-mail : crevis@crevis.co.kr

Mapping Data into the image Table

Output Image Value

Bit No	Bit7	Bit6	Bit5	Bit4	Bit3	Bit2	Bit1	Bit0
Byte0	Reserved				D3	D2	D1	D0

Output Module Data

D3	D2	D1	D0

Input Diagnostic Status

Input Image Value

Bit No	Bit7	Bit6	Bit5	Bit4	Bit3	Bit2	Bit1	Bit0
Byte0	Reserved				S3	S2	S1	S0

Expansion Module Status LED

Status	LED is	To indicate
Not Powered	Off	Device has no expansion Module or may not be powered
No Initialized		The Parameter is not initialized yet.
Fn-Bus Connection	Green	FnBus normal Operation
Fn-Bus Ready	Flashing Green	FnBus Ready
Fn-Bus Fault	Flashing Red	FnBus Time Out
		FnBus Failed Communication
Device Fault	Red	Device Fault

Channel Status LED

Status	LED is	To indicate
Not Signal	Off	Normal Operation
On Signal	Green	Normal Operation