4 Channels Voltage Input Terminal 0V~5V, 14bit

- ST-3644는 4 Channels analog voltage type input이며, 0~5V의 값을 signal로 받습니다.
- Input signal은 전기적으로 절연되며 14bits의 분해능력을 가집니다.
- 이 module에는 5개의 상태 LED가 있으며, 하나는 network 상태, 나머지는 field devices 상태를 위한 것입니다.
- Input channels differential inputs입니다. Shield는 DIN rail에 직접 연결됩니다.

Items	Specification
Input Specification	
Number of Inputs	4 Channels Single Ended, Non-isolated Between Channels
Indicators	4 Green/Red States, 1 Green/Red FnBus State
Resolution in Ranges	14Bits : 0.3mV/Bit
Input Voltage Range	0 ~ 5Vdc
Data Format	16bits Integer (2's compliment)
Module Error	±0.1% Full Scale @25℃ ±0.3% Full Scale @0℃, 60℃
Input Impedance	500KΩ
Conversion Time	4msec / All channel
Calibration	Not Required
Diagnostic	No
Common Type	4 Channels / 2COM (Single Channel)
General Specification	
Power Supply	From System Power DC/DC
Power Dissipation	Max. 200mA @ 5.0Vdc
Isolation	I/O to Logic : Photocoupler isolation Field power : Not Connected
Wiring	I/O Cable Max. 2.0㎟
Weight	70g
Module Size	12mm x 99mm x 70mm
Environment Condition	Refer to " Environment Specification"(page : 1-261)

Pin No	Description
0	Input Channel 0
1	Input Channel 1
2	Input Channel 2
3	Input Channel 3
4	Input Channel Common(0V)
5	Input Channel Common(0V)
6	Chassis Ground / Shield
7	Chassis Ground / Shield

Wire Diagram

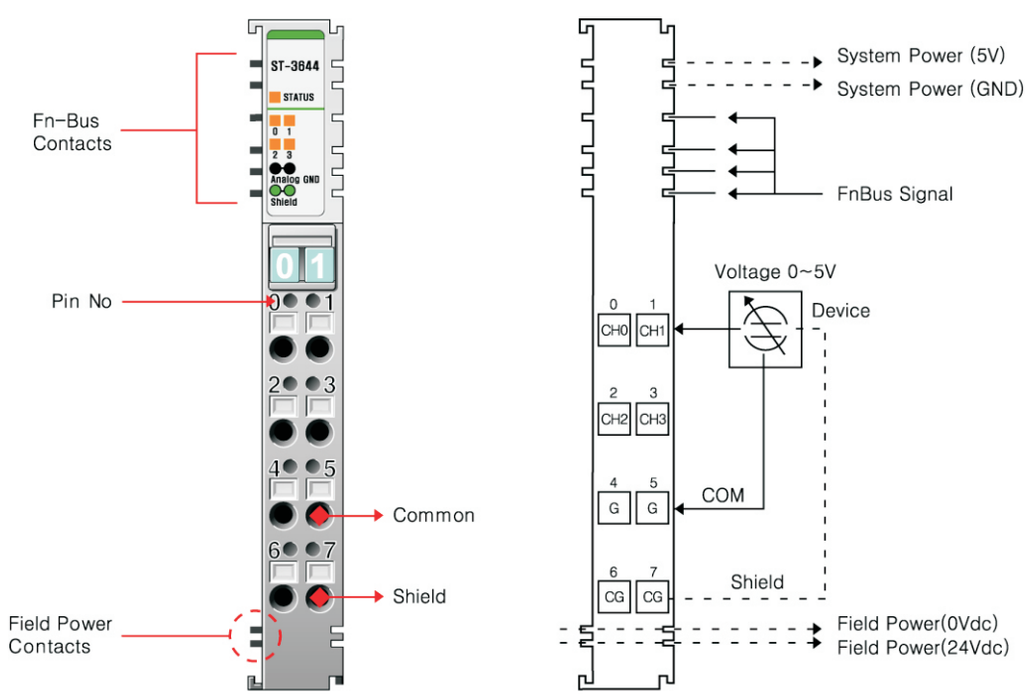

(주)크레비스 TEL:031-206-8077~8 http://www.crevis.co.kr e-mail : crevis@crevis.co.kr

Mapping Data into the image Table

Input Module Data

Analog Input Ch0
Analog Input Ch1
Analog Input Ch2
Analog Input Ch3

Input Image Value

Bit No	Bit7	Bit6	Bit5	Bit4	Bit3	Bit2	Bit1	Bit0
Byte 0	Analog Input Ch0 Low byte							
Byte 1	Analog Input Ch0 High byte							
Byte 2	Analog Input Ch1 Low byte							
Byte 3	Analog Input Ch1 High byte							
Byte 4	Analog Input Ch2 Low byte							
Byte 5	Analog Input Ch2 High byte							
Byte 6	Analog Input Ch3 Low byte							
Byte 7	Analog Input Ch3 High byte							

Expansion Module Status LED

Status	LED is	To indicate
Not Powered	Off	Device has no expansion Module or may not be powered
No Initialized		The Parameter is not initialized yet.
Fn-Bus Connection	Green	FnBus normal Operation
Fn-Bus Ready	Flashing Green	FnBus Ready
Fn-Bus Fault	Flashing Red	FnBus Time Out
		FnBus Failed Communication
Device Fault	Red	Device Fault

Channel Status LED

Status	LED is	To indicate
Nominal	Green	Normal Operation

ST-3644
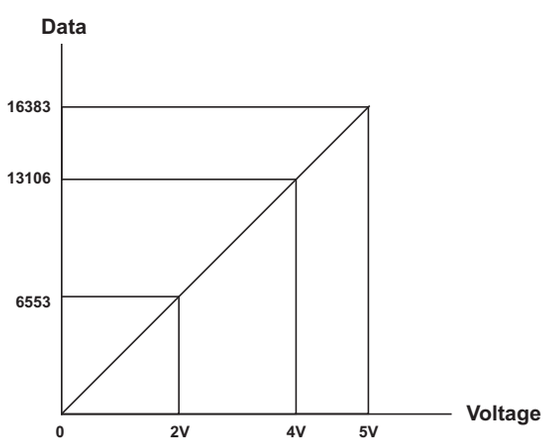
Voltage	0V	2V	4V	5V
Data(Hex)	H0000	H1999	H3332	H3FFF