# 4 Channels Current Input Terminal 4~20mA, 12bit

- ST-3214는 4 Channels analog current type input이며, 4~20mA의 값을 signal로 받습니다.
- Input signal 은 전기적으로 절연되며 12 bits의 분해능력을 가집니다.
- 이 module에는 5개의 상태 LED가 있으며, 하나는 network 상태, 나머지는 field devices 상태를 위한 것입니다.
- Input channels differential inputs입니다. Shield는 DIN rail 에 직접 연결됩니다.

| Items | Specification |
|---|---|
| **Input Specification** | |
| Number of Inputs | 4 Channels Single Ended, Non-isolated Between Channels |
| Indicators | 4 Green/Red States, 1 Green/Red FnBus State |
| Resolution in Ranges | 12Bits : 3.9uA/Bit |
| Input current Range | 4 ~ 20mA |
| Data Format | 16bits Integer (2's compliment) |
| Module Error | ±0.1% Full Scale @25℃<br>±0.3% Full Scale @0℃, 60℃ |
| Input Impedance | 120Ω |
| Conversion Time | 4msec / All channel |
| Calibration | Not Required |
| Diagnostic | Channel Open ( if < 3mA, Data=0x8000 ) |
| Common Type | 4 Channels / 2COM (Single Common) |
| **General Specification** | |
| Power Supply | From System Power DC/DC |
| Power Dissipation | Max. 165mA @ 5.0Vdc |
| Isolation | I/O to Logic : Photocoupler isolation<br>Field power : Not Connected |
| Wiring | I/O Cable Max. 2.0㎟ |
| Weight | 70g |
| Module Size | 12mm x 99mm x 70mm |
| Environment Condition | Refer to " Environment Specification"(page : 1-261) |

| Pin No | Description |
|---|---|
| 0 | Input Channel 0 |
| 1 | Input Channel 1 |
| 2 | Input Channel 2 |
| 3 | Input Channel 3 |
| 4 | Input Channel Common(0V) |
| 5 | Input Channel Common(0V) |
| 6 | Chassis Ground / Shield |
| 7 | Chassis Ground / Shield |

## Wire Diagram

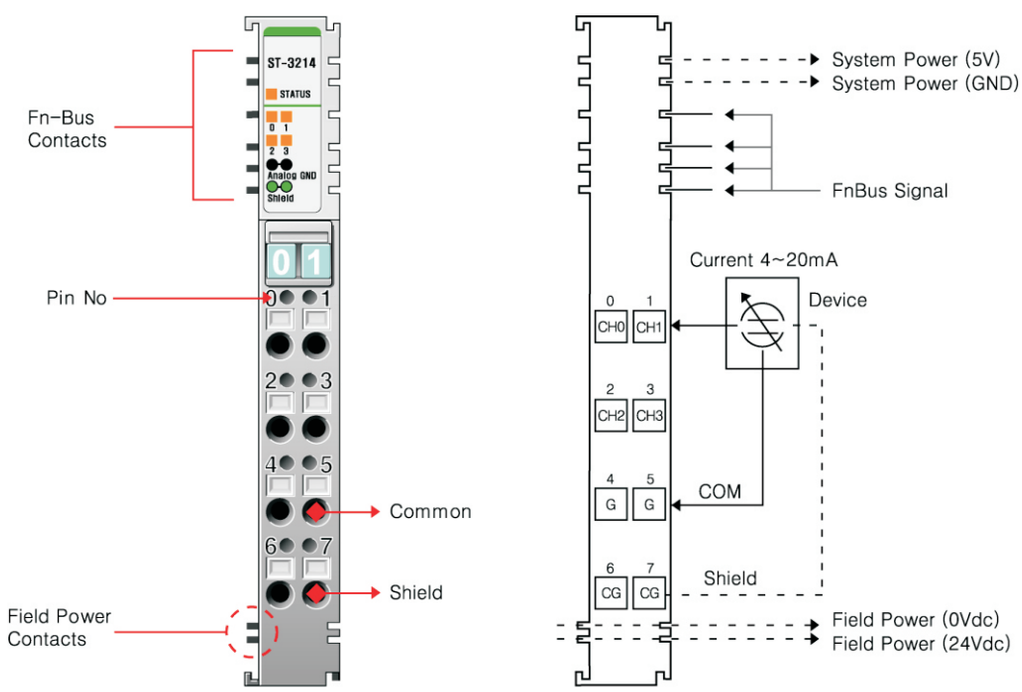



(주)크레비스 TEL:031-206-8077~8 http://www.crevis.co.kr e-mail : crevis@crevis.co.kr

## Mapping Data into the image Table

**Input Module Data**

| |
|---|
| Analog Input Ch0 |
| Analog Input Ch1 |
| Analog Input Ch2 |
| Analog Input Ch3 |

**Input Image Value**

| Bit No | Bit7 | Bit6 | Bit5 | Bit4 | Bit3 | Bit2 | Bit1 | Bit0 |
|---|---|---|---|---|---|---|---|---|
| **Byte 0** | Analog Input Ch0 Low byte | | | | | | | |
| **Byte 1** | Analog Input Ch0 High byte | | | | | | | |
| **Byte 2** | Analog Input Ch1 Low byte | | | | | | | |
| **Byte 3** | Analog Input Ch1 High byte | | | | | | | |
| **Byte 4** | Analog Input Ch2 Low byte | | | | | | | |
| **Byte 5** | Analog Input Ch2 High byte | | | | | | | |
| **Byte 6** | Analog Input Ch3 Low byte | | | | | | | |
| **Byte 7** | Analog Input Ch3 High byte | | | | | | | |

## Expansion Module Status LED

| Status | LED is | To indicate |
|---|---|---|
| Not Powered | Off | Device has no expansion Module or may not be powered |
| No Initialized | | The Parameter is not initialized yet. |
| Fn-Bus Connection | Green | FnBus normal Operation |
| Fn-Bus Ready | Flashing Green | FnBus Ready |
| Fn-Bus Fault | Flashing Red | FnBus Time Out |
| | | FnBus Failed Communication |
| Device Fault | Red | Device Fault |

## Channel Status LED

| Status | LED is | To indicate |
|---|---|---|
| Nominal | Green | Normal Operation |
| Channel Fault | Red | Channel Open |

## ST-3214
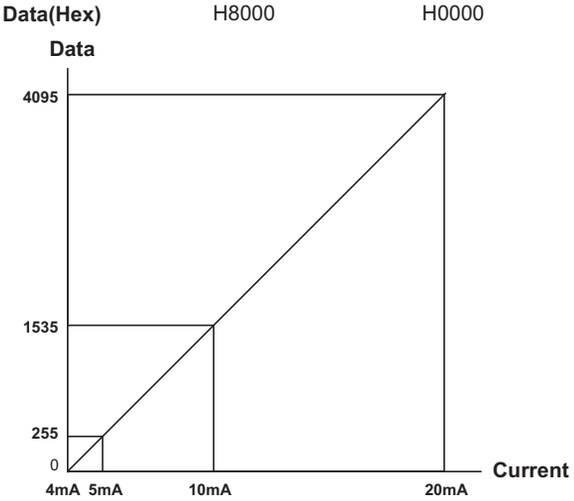
| Current | 3.0mA | 4.0mA | 5.0mA | 10.0mA | 20.0mA |
|---|---|---|---|---|---|
| **Data(Hex)** | H8000 | H0000 | H00FF | H05FF | H0FFF |