1Channel PULSE Output, 0.5A/24Vdc, Source

-ST-5641은 1 Channel Pulse Output Module 입니다. Output Frequency가 1 ~ 20,000Hz입니다.
-이 module의 Pulse Output Duty는 50% Fixed, Ton>5us, Toff>5us 입니다.
-이 module은 3개의 LED가 있으며, 하나는 Network 상태 나머지는 모듈의 입출력 상태를 나타냅니다.

Items	Specification
Output Specification	
Number of Channels	1 Channel, Source Type
Number of Outputs	2 Output/Channel 2 Output (1 Pulse Output, 1 Pulse Direction Output)
Indicators	1 Green/Red FnBus Status 1 Pulse Output LED, 1 Pulse Direction Output LED
Output Current	0.5A/Output, 1A/All Output, short protection
Pulse Output Frequency	1~20,000Hz±0.5%
Pulse Output Duty	50%±3.0% Fixed, Ton>5us, Toff>5us
Pulse Output Quantity with One Command	Continuous Pulse Output Max. +1~+32767 : Pulse Direction Output OFF Max. -1~-32767 : Pulse Direction Output ON.
Pulse Output Counter	Signed 32bit-wide
Diagnostic	Yes, Short protection
Common Type	2Common
General Specification	
Power Dissipation	Max. 150mA@5.0Vdc
Isolation	I/O to Logic : Photocoupler Isolation I/O to Field Power : Non-Isolation
Field Power	Supply Voltage : 24Vdc nominal Voltage Range : 18~28.8Vdc Power Dissipation : Max. 60mA@24Vdc except Load
Wiring	I/O Cable Max. 2.0㎟(AWG#14)
Weight	70g
Module Size	12mm x 99mm x 70mm
Environment Condition	Refer to " Environment Specification"(page : 1-261)

Pin No	Description
0	Pulse Output Channel 0
1	Pulse Direction Output Channel 0
2	-
3	-
4	Field Power 0V, Common
5	Field Power 0V, Common
6	Field Power 24V
7	Field Power 24V

Wire diagram

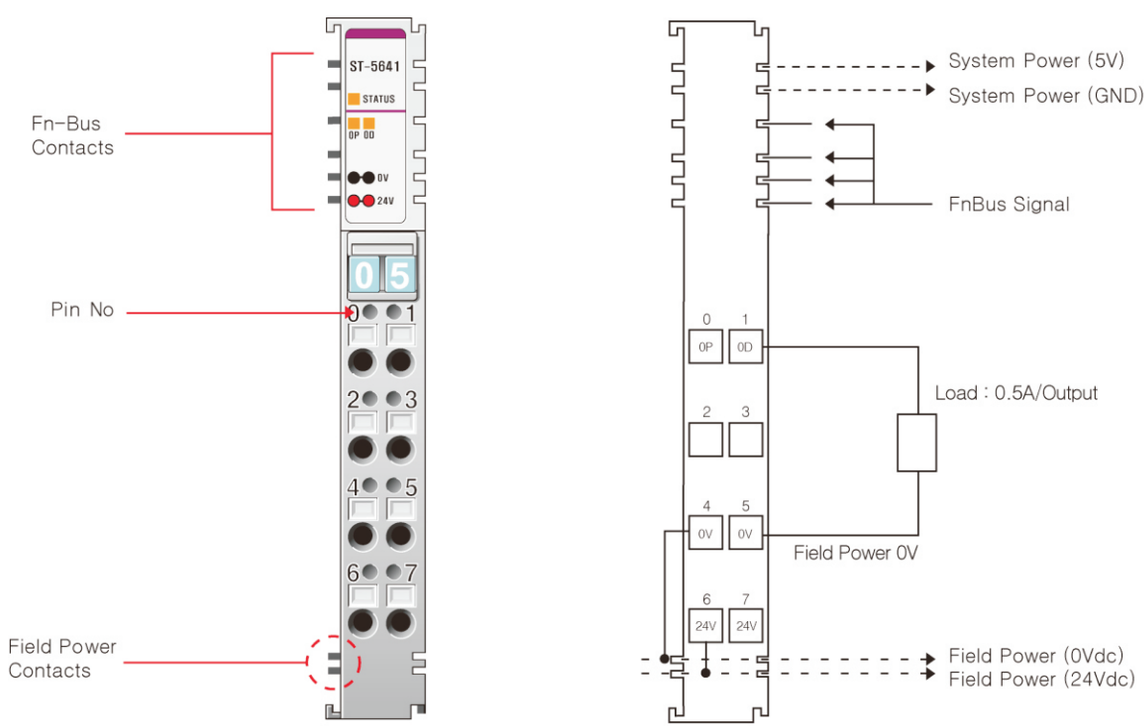

(주)크래비스 TEL:031-206-8077~8 http://www.crevis.co.kr e-mail : crevis@crevis.co.kr

I/O Process Image Table

Input Data

Byte Offset	Decimal Bits Bit 7	Bit 6	Bit 5	Bit 4	Bit 3	Bit 2	Bit 1	Bit 0
Byte #0	Real Pulse Output Counter Ch#0 LL							
Byte #1	Real Pulse Output Counter Ch#0 LH							
Byte #2	Real Pulse Output Counter Ch#0 HL							
Byte #3	Real Pulse Output Counter Ch#0 HH							

Output Data

Byte Offset	Decimal Bits Bit 7	Bit 6	Bit 5	Bit 4	Bit 3	Bit 2	Bit 1	Bit 0
Byte #0	Pluse Frequency Ch#0 Low Byte							
Byte #1	Pluse Frequency Ch#0 High Byte							
Byte #2	Pluse Output Qty Ch#0 Low Byte							
Byte #3	Pluse Output Qty Ch#0 High Byte							
Byte #4	RUN0	ECP0	----	CLRCNT0	----	----	Frequency Multiple0	
Byte #5								

- Pulse Output Qty is a signed 16bit-wide data.
- The duty of each channel frequency is fixed by 50%.
- If Pulse Output Qty >= 0, Direction Output turns OFF. If Pulse Output Qty < 0, Direction Output turns ON.
- Byte8 is a control for Channel#0.

Frequency Multiple0 Selection

Value	Description
0(B'00)	x1 Frequency Multiple
1(B'01)	x10 Frequency Multiple
2(B'10)	x100 Frequency Multiple
3(B'11)	x1000 Frequency Multiple

Configuration Parameter Table

Byte Offset	Decimal Bits Bit 7	Bit 6	Bit 5	Bit 4	Bit 3	Bit 2	Bit 1	Bit 0
0	Reserved							
1	Reserved							