2 Channels PWM Output, 0.5A/24Vdc, Source

-ST-5442는 2 Channels PWM Output Module 입니다. Duty비가 0.0~100.0%(0.1%/1LSB),Ton>5us,Toff>5us 입니다.
-이 module은 Frequency/Duty Factor를 제어할 수 있습니다.
-이 module은 3개의 LED가 있으며, 하나는 Network 상태, 나머지는 모듈의 입출력 상태를 나타냅니다.

Items	Specification
Output Specification	
Number of Outputs	2 Channels, Source Type
Indicators	1 Green/Red FnBus Status
	2 Channel LEDs
Output Current	0.5A/Ch, 1A/All Channel, short protection
Output Inrush Current	Max.1.5A, 100ms/Ch
PWM Frequency	1~2500Hz±0.5%
PWM Duty	0.0~100.0%±1.0%(0.1%/1LSB), Ton>5us, Toff>5us
Diagnostic	Short Protection
Common Type	2Common
General Specification	
Power Dissipation	Max. 150mA@5.0Vdc
Isolation	I/O to Logic : Photocoupler Isolation
	I/O to Field Power : Non-Isolation
Field Power	Supply Voltage : 24Vdc nominal
	Voltage Range : 18~28.8Vdc
	Power Dissipation : Max. 50mA@24Vdc except Load
Wiring	I/O Cable Max. 2.0㎟(AWG#14)
Weight	70g
Module Size	12mm x 99mm x 70mm
Environment Condition	Refer to " Environment Specification"(page : 1-261)

Pin No	Description
0	PWM Output Channel 0
1	PWM Output Channel 1
2	-
3	-
4	Field Power 0V, Common
5	Field Power 0V, Common
6	Field Power 24V
7	Field Power 24V

Wire diagram

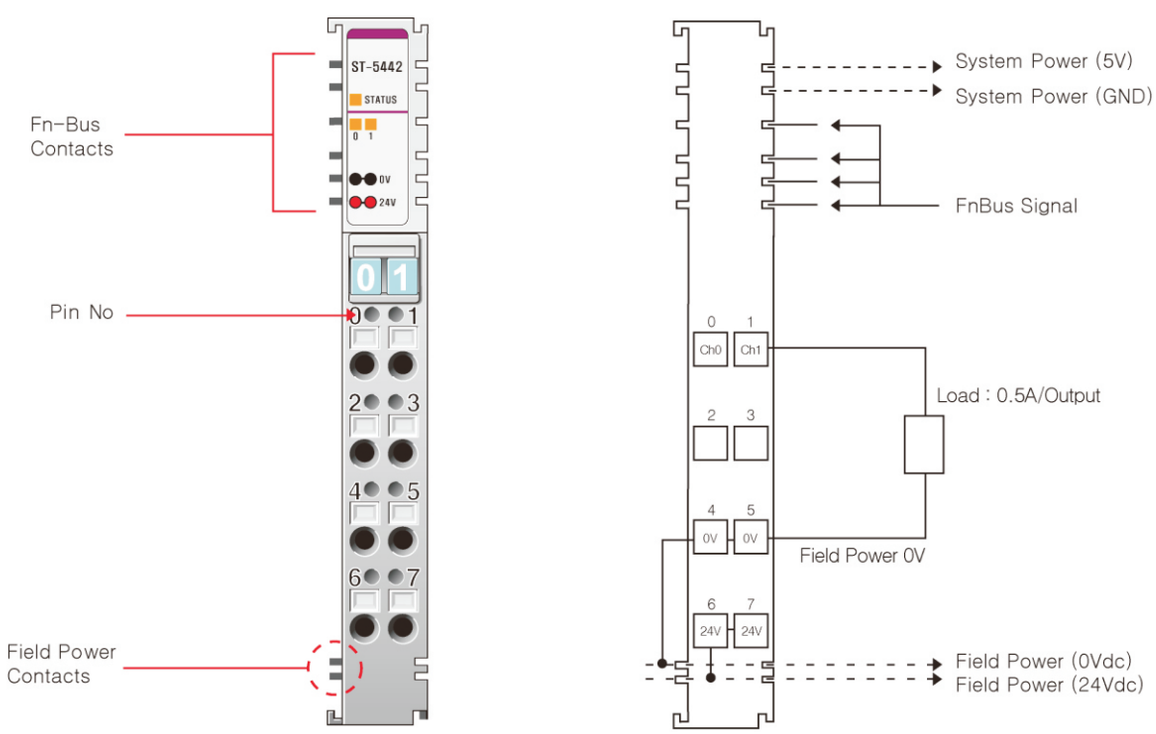

(주)크레비스 TEL:031-206-8077~8 http://www.crevis.co.kr e-mail : crevis@crevis.co.kr

I/O Process Image Table

Input Data

Byte Offset	Decimal Bits Bit 7	Bit 6	Bit 5	Bit 4	Bit 3	Bit 2	Bit 1	Bit 0
Byte #0				Reserved				
Byte #1				Reserved				

Output Data

Byte Offset	Decimal Bits Bit 7	Bit 6	Bit 5	Bit 4	Bit 3	Bit 2	Bit 1	Bit 0
Byte #0				Frequency Ch#0,1 Low Byte				
Byte #1				Frequency Ch#0,1 High Byte				
Byte #2				Duty Ch#0 Low Byte				
Byte #3				Duty Ch#0 High Byte				
Byte #4				Duty Ch#1 Low Byte				
Byte #5				Duty Ch#1 High Byte				

- Ch#0,1 are using the same frequency.
- Range of each Duty is 0(0.0%) ~ 1000(100.0%). If Duty value is 365, then duty rate is 36.5%

Configuration Parameter Table

Byte Offset	Decimal Bits Bit 7	Bit 6	Bit 5	Bit 4	Bit 3	Bit 2	Bit 1	Bit 0
0				**Reserved**				
1				**Reserved**				