1 Channel Voltage Output Terminal 0~10V, 12bit

- ST-4491는 1 Channel analog voltage type output이며, 0~10V의 표준화된 signal을 만들어냅니다.
- Signal은 12bits의 분해능력으로 공급되며 전기적으로 절연되어 있습니다.
- 이 module에는 network 상태를 나타내는 1개의 LED가 있습니다.

Items	Specification
Output Specification	
Outputs Per Module	1Channel single ended
Indicators	1 Green/Red FnBUS State
Resolution in Ranges	12 bits : 2.44mV/Bit
Output Voltage Range	0 ~ 10Vdc
Data Format	16bits Integer (2'compliment)
Module Error	0.1% Full Scale @25℃ 0.3% Full Scale @0℃, 60℃
Load Resistance	Min. 2kΩ
Conversion Time	1.2msec / All Channel
Calibration	Not Required
Diagnostic	No
Common Type	2Common/Module
General Specification	
Power Dissipation	Max.60mA@5.0Vdc
Isolation	I/O to Logic : Photocoupler Isolation
Field Power	Not used, Field Power by pass to next expansion module
Wiring	I/O Cable Max. 2.0mm (AWG#14)
Weight	70g
Module Size	12mm x 99mm x 70mm
Environment Condition	Refer to " Environment Specification"(page : 1-261)

Pin No	Description
0	Output Channel 0
1	----
2	----
3	----
4	AGND
5	AGND
6	Shield
7	Shield

Wire Diagram

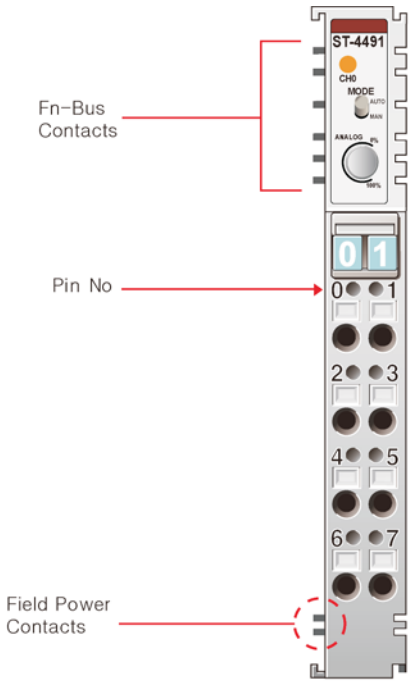

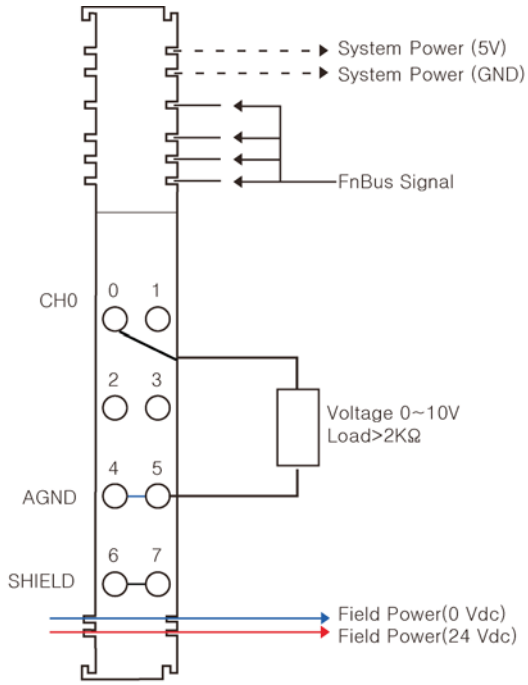

(주)크레비스 TEL:031-206-8077~8 http://www.crevis.co.kr e-mail : crevis@crevis.co.kr

Mapping Data into the image Table

Input Image Value
-4byte

Bit No	Bit7	Bit6	Bit5	Bit4	Bit3	Bit2	Bit1	Bit0
Byte 0	----	----	----	----	----	----	----	Ch#0
	Auto/manual detection 0b : Ch# Auto 1b : Ch#0 Manual							
Byte 1	Reserved							
Byte 2	Ch#0 Manual Low byte							
Byte 3	Ch#0 Manual High byte							

Output Image Value
-2byte

Bit No	Bit7	Bit6	Bit5	Bit4	Bit3	Bit2	Bit1	Bit0
Byte 0	Ch#0 Conversion Data Low Byte							
Byte1	Ch#0 Conversion Data High Byte							

Configuration Parameter
-4byte

Bit No	Bit7	Bit6	Bit5	Bit4	Bit3	Bit2	Bit1	Bit0
Byte 0	----	----	----	----	----	----	Ch#0 Fault Action	
	Fault Aciton 00b : Fault Value 01b : Hold Last Value 10b : Low Limit 11b : High Limit							
Byte 1	Reserved							
Byte 2	Ch#0 Fault Value Low							
Byte 3	Ch#0 Fault Value High							

ST-4491

Voltage	0V	2.5V	5V	10V
Data(Hex)	H0000	H03FF	H07FF	H0FFF

Switch(MODE)

Switch is	Status	Description
Auto	Auto	
Manual	Manual for CH0	Ch#0 Analog Output vary according to the potentiometer

Expansion Module Status LED
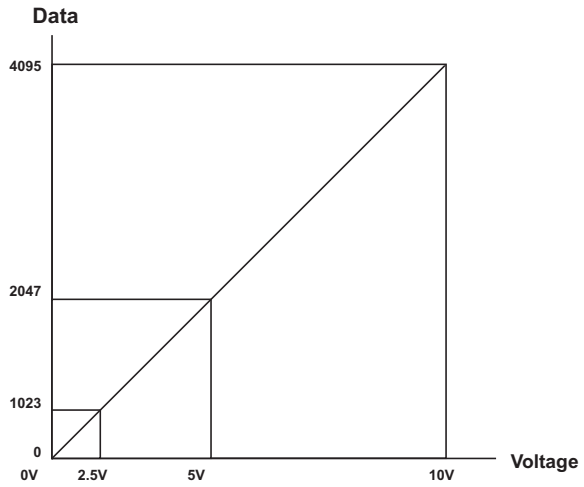
Status	LED is
Not Powered	Off
Auto Operation	Green
Manual Operation	Flashing Green