2 Channels Current Output Terminal 4~20mA, 12bit

- ST-4212는 2 Channels analog current type output이며, 4~20mA의 표준화된 signal을 만들어냅니다.
- Signal은 12bits의 분해능력으로 공급되며 전기적으로 절연되어 있습니다.
- 이 module에는 3개의 상태 LED가 있으며, 하나는 network 상태, 나머지는 field devices 상태를 위한 것입니다.

Items	Specification
Output Specification	
Outputs Per Module	2Channels single ended, Non-isolated between channel
Indicators	2 Green States, 1 Green/Red FnBUS State
Resolution in Ranges	12 bits : 3.9uA/Bit
Output Current Range	4 ~ 20mA
Data Format	16bits Integer (2'compliment)
Module Error	±0.1% Full Scale @25℃ ±0.3% Full Scale @0℃ , 60℃
Load Resistance	Max. 500Ω
Conversion Time	2msec / All channel
Calibration	Not Required
Diagnostic	No
Common Type	2Channels / 2COM (Single Common)
General Specification	
Power Dissipation	Max. 60mA @ 5.0Vdc
Isolation	I/O to Logic : Photocoupler Isolation Field power : Non-isolation
Field Power	Supply Voltage : 24Vdc nominal Voltage Range : 15~28.8Vdc Power Dissipation : Max. 60mA @24Vdc
Wiring	I/O Cable Max. 2.0㎟
Weight	70g
Module Size	12mm x 99mm x 70mm
Environment Condition	Refer to " Environment Specification"(page : 1-261)

Pin No	Description
0	Output Channel 0
1	Output Channel 1
2	NC
3	NC
4	Output Channel Common(0V)
5	Output Channel Common(0V)
6	Chassis Ground / Shield
7	Chassis Ground / Shield

C = Common / DC Return
L = Chassis Ground / Shield
NC = No Connection

Wire Diagram

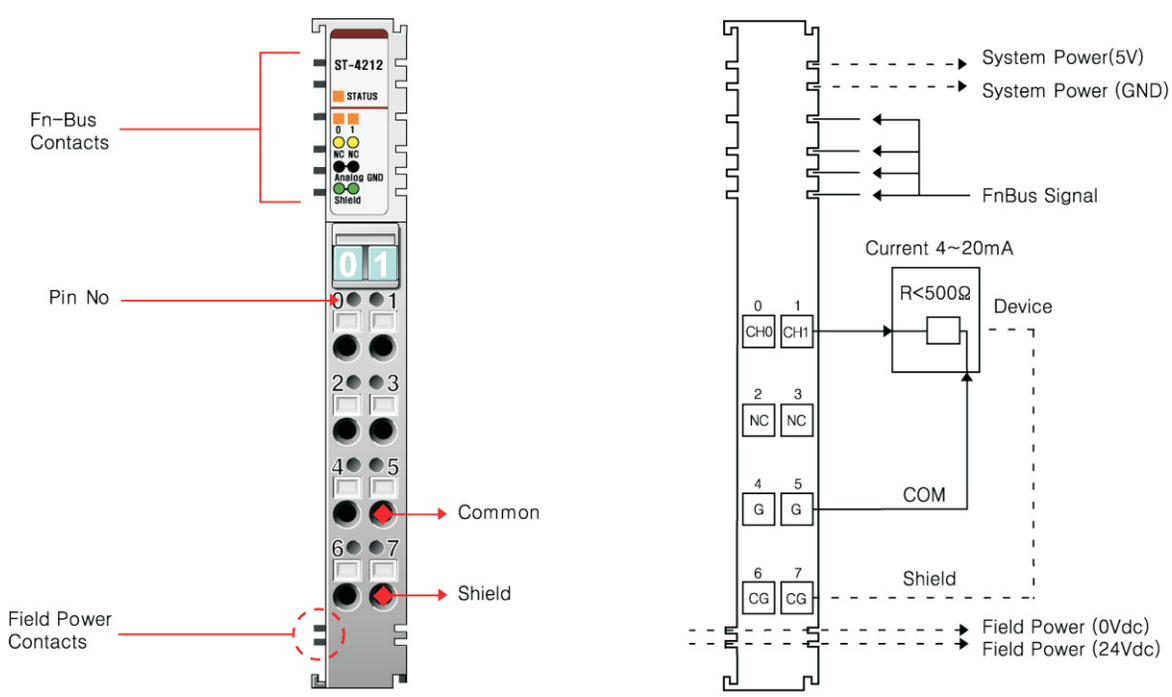

(주)크레비스 TEL:031-206-8077~8 http://www.crevis.co.kr e-mail : crevis@crevis.co.kr

Mapping Data into the image Table

Output Image Value

Bit No	Bit7	Bit6	Bit5	Bit4	Bit3	Bit2	Bit1	Bit0
Byte 0	Analog Output Ch0 Low byte							
Byte 1	Analog Output Ch0 High byte							
Byte 2	Analog Output Ch1 Low byte							
Byte 3	Analog Output Ch1 High byte							

Output Module Data

Analog Output Ch0
Analog Output Ch1

Expansion Module Status LED

Status	LED is	To indicate
Not Powered	Off	Device has no expansion Module or may not be powered
No Initialized		The Parameter is not initialized yet.
Fn-Bus Connection	Green	FnBus normal Operation
Fn-Bus Ready	Flashing Green	FnBus Ready
Fn-Bus Fault	Flashing Red	FnBus Time Out
		FnBus Failed Communication
Device Fault	Red	Device Fault

Channel Status LED

Status	LED is	To indicate
Nominal	Green	Normal Operation

ST-4212
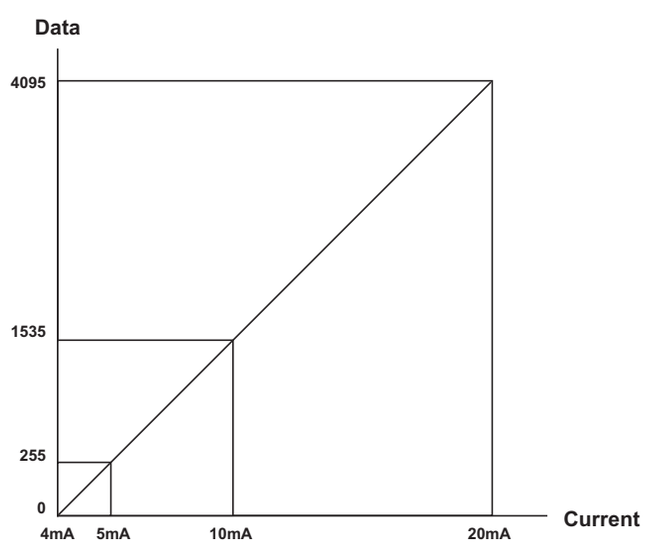
Current	4.0mA	5.0mA	10.0mA	20.0mA
Data(Hex)	H0000	H00FF	H05FF	H0FFF