8 Channels Current Input Terminal 0~20mA, 12bit

- ST-3118은 8 Channels analog current type input이며, 0~20mA의 값을 signal로 받습니다.
- Input signal은 전기적으로 절연되며 12 bits의 분해능력을 가집니다.
- 이 module에는 network 상태를 나타내는 1개의 LED가 있습니다.
- Input channels differential inputs입니다. Shield는 DIN rail에 직접 연결됩니다.

Items	Specification
Input Specification	
Number of Inputs	8 Channels Single Ended
Indicators	1 Green/Red FnBus State
Resolution in Ranges	12Bits : 4.88uA/Bit
Input Range	0 ~ 20mA
Data Format	16bits Integer (2's compliment)
Module Error	±0.1% Full Scale @25℃ ±0.3% Full Scale @0℃, 60℃
Input Impedance	120Ω
Conversion Time	4msec / All channel
Calibration	Not Required
Diagnostic	No
Common Type	Nothing in the module terminal Field Power 0V is Common(AGND)
General Specification	
Power Dissipation	Max. 80mA @ 5.0Vdc
Isolation	I/O to Logic : Photocoupler isolation I/O to Field Power : Non-Isolation
Field Power	Supply Voltage : 24Vdc nominal Voltage Range : 18~28.8Vdc Power Dissipation : Max. 40mA@24Vdc
Wiring	I/O Cable Max. 2.0㎟(AWG#14)
Weight	70g
Module Size	12mm x 99mm x 70mm
Environment Condition	Refer to " Environment Specification"(page : 1-261)

Pin No	Description
0	Input Channel 0
1	Input Channel 1
2	Input Channel 2
3	Input Channel 3
4	Input Channel 4
5	Input Channel 5
6	Input Channel 6
7	Input Channel 7

Wire Diagram

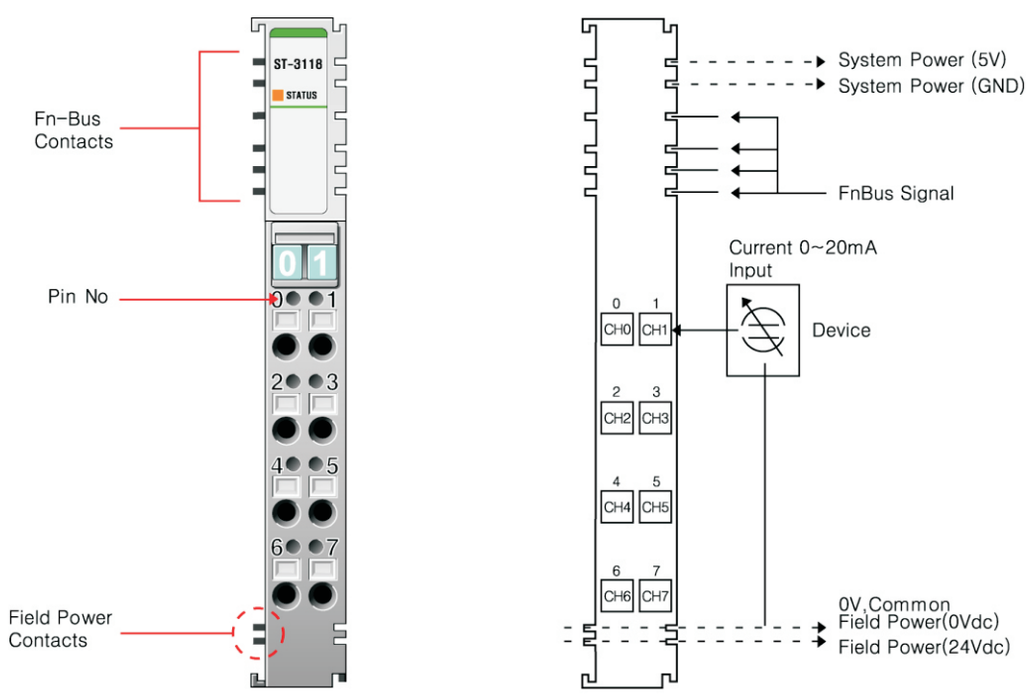

(주)크레비스 TEL:031-206-8077~8 http://www.crevis.co.kr e-mail : crevis@crevis.co.kr

Mapping Data into the image Table

Input Module Data
- 16byte Input Data

Analog Input Ch0
Analog Input Ch1
Analog Input Ch2
Analog Input Ch3
Analog Input Ch4
Analog Input Ch5
Analog Input Ch6
Analog Input Ch7

Input Image Value

Bit No	Bit7	Bit6	Bit5	Bit4	Bit3	Bit2	Bit1	Bit0
Byte 0	Analog Input Ch0 Low byte							
Byte 1	Analog Input Ch0 High byte							
Byte 2	Analog Input Ch1 Low byte							
Byte 3	Analog Input Ch1 High byte							
Byte 4	Analog Input Ch2 Low byte							
Byte 5	Analog Input Ch2 High byte							
Byte 6	Analog Input Ch3 Low byte							
Byte 7	Analog Input Ch3 High byte							
Byte 8	Analog Input Ch4 Low byte							
Byte 9	Analog Input Ch4 High byte							
Byte 10	Analog Input Ch5 Low byte							
Byte 11	Analog Input Ch5 High byte							
Byte 12	Analog Input Ch6 Low byte							
Byte 13	Analog Input Ch6 High byte							
Byte 14	Analog Input Ch7 Low byte							
Byte 15	Analog Input Ch7 High byte							

Expansion Module Status LED

Status	LED is	To indicate
Not Powered	Off	Device has no expansion Module or may not be powered
No Initialized		The Parameter is not initialized yet.
Fn-Bus Connection	Green	FnBus normal Operation
Fn-Bus Ready	Flashing Green	FnBus Ready
Fn-Bus Fault	Flashing Red	FnBus Time Out
		FnBus Failed Communication
Device Fault	Red	Device Fault

ST-3118
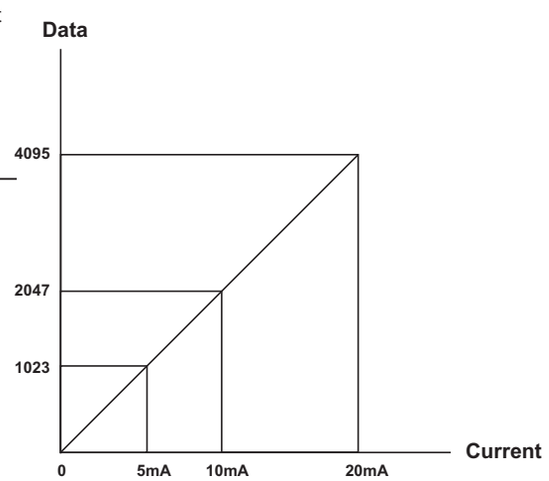
Current	0.0mA	5.0mA	10.0mA	20.0mA
Data(Hex)	H0000	H03FF	H07FF	H0FFF